UK ChemCAD Seminar - November 2000

PROCESS MODELLING AND CONTROL

OF

BATCH REACTORS IN THE FINE CHEMICALS INDUSTRY

by
John E. Edwards
jee@pidesign.co.uk

Download available from www.pidesign.co.uk

Contents

1.0 Introduction

2.0 Process Characteristics
2.1 Reaction Chemistry
2.2 Process Engineering Constraints

3.0 Control Configurations
3.1 Direct Jacket Heat/Cool
3.2 Direct Jacket Cool/Indirect Heat
3.3 Indirect Jacket Heat/Cool
3.4 Instrumentation and Control

4.0 Performance Predictions

Appendices

I Summary of Heat Transfer in Glass Lined Reactors
(Acknowledgements to Pfaudler Reactor Systems)
II Control Valve Characteristic Selection
III Control Loop Tuning
IV ChemCAD User Guidance Notes

Figures

1. Reactor Control Systems
2. Indirect Jacket Heating Model
3. Indirect Jacket Cooling Model
4. Condenser Control System
5. Condenser Control System Model
6. Control Valve Characteristics
7. Controller & Control Valve Action (ChemCAD)
8. Reactor Thermal Rating Spreadsheet
9. Batch Reactor Plot Options

Graphs

1. 1600L Hastelloy Reactor Heat Up
2. 1600L Reactor Boil Up/Emissions
3. 1600L Hastelloy Reactor Cool Down
4. Condenser Model Controller Tuning T_u
5. Condenser Model Controller Tuning

References

1. F.G. Shinskey, “Process Control Systems”, McGraw-Hill, 1967.
2. J. Wilday and J. Etchells, “Workbook for Chemical Reactor Relief System Sizing”, HSE Contract Research Report 136/1998.
3. Foxboro Technical Information, 31-10K, August 1975.
4. J.G. Ziegler and N.B. Nichols, “Optimum Settings for Automatic Controllers”, Transactions of the American Society of Mechanical Engineers, Volume 42, pages 759-768, 1942.
5. J.E.Edwards, “Relief and Blowdown in Batch Processes”, European ChemCAD Symposium 1999 (Available as download www.pidesign.co.uk).
6. P & I Design, Batch Reactor Thermal Rating XLBREAC, Version 4.1.
7. F. Bondy and S. Lippa, “Heat Transfer in Agitated Vessels” Chemical Engineer, 1983.
8. Silver, Gas Cooling with Aqueous Condensation, Transations I.Chem.E Vol.25, p30, 1974.
9. Bell and Khaly – Approximate Method for Multi-Component Consideration, AI.Chem.E Symposium Series, Vol 69, 131, p72, 1972.

1.0 INTRODUCTION

Batch reactors are used extensively for the manufacture of small volume high value added products increasingly in production facilities intended for multipurpose use.

To achieve stable and reproducible operational conditions is increasingly of importance to achieve the required product purity, optimum yields and cycle times to satisfy the relevant regulatory authorities and commercial requirements.

Operators are also required to notify the appropriate Environment Agency of the peak and total emissions to the environment from their processes.

Batch processes are inherently transient in nature and the process engineer is being called upon to demonstrate dynamically the adequacy of the equipment design in this increasingly regulatory environment.

This paper reviews the basic techniques for process modelling and control of batch reaction systems under steady state and dynamic conditions.

The main aspects considered are:-

- Heat up and cool down performances.
- Sensitivity analysis for reactor parameters.
- Boil up rate predictions.
- Thermal stability under exothermic conditions.
- Control system design and loop tuning parameters.
- Condenser rating.
- Process emission predictions.

A further important consideration in the design and safe operation of batch reaction systems is the design of the emergency pressure relief and blowdown facilities which is beyond the scope of this paper. However, this topic is covered extensively elsewhere.[(2) (5)]

Several process modelling packages are available for the study of steady state conditions and the behaviour of batch processes. This paper is based on the Chemstations range of integrated packages which are linked to a considerable component physical property database complete with extensive thermodynamic options to allow a detailed study and understanding of all aspects of batch processing.

2.0 PROCESS CHARACTERISTICS

2.1 Reaction Chemistry

Endothermic reactions exhibit a marked degree of self regulation in regards to thermal stability and do not require further consideration.

Exothermic reactions require a detailed understanding of the reaction kinetics to provide reaction rate and heat of reaction which should be determined by screening tests using the appropriate calorimeter.[2]

The heat removal requirement depends on the type of reaction. Vapour pressure systems with reaction at the reflux temperature are referred to as a tempered reaction system due to heat removal by latent heat reducing the heat removal requirement for the jacket/coil cooling system.

Gassy systems generate a permanent gas and require total heat evolved to be absorbed by the jacket/coil cooling system.

Hybrid systems are a combination of the previous two reaction types and can result in a significant emission of volatile organic compounds (VOC) from the overhead condensing system due to inerts.

The reaction rate [1] depends on the reaction order where a first order reaction conversion varies with time and a second order reaction conversion varies with square of the reactant concentrations. First order reactions have the highest rate where the conversion is least i.e. at time zero.

The reaction rate can be limited by adding the reactant continuously at a controlled rate to ensure heat of reaction rate does not exceed the heat removal capability of the system.

Some reactions are carried out with all the reactants charged i.e. “all on board”. Their reactions are frequently carried out at total reflux which enhances the system heat removal capability.

Predicting the physical properties of the reaction mix during various steps in the process due to composition and temperature changes can have a significant effect on the reactor performance. ChemCAD includes an extensive component database with facilities for User added components which in conjunction with CCReacs provides a powerful modelling tool for predicting homogeneous reaction mixtures essential for thermal and emergency relief design.

2.2 Process Engineering Constraints

2.2.1 Thermal

An inherent characteristic of stirred batch reactors with coils or external jackets is the thermal lags associated with the heat capacities of the reactor, reaction mix, jacket contents and jacket service system and the dead time of the circulation system. Typically glass lined reactors vary in weight from 475 kg (100L) to 12200 kg (12500L) with equivalent jacket volumes of 46L and 1200L. The lags associated with the jacket services using thermal fluids are minimised by using forced circulation and plate heat exchangers for fast response. A reactor thermal rating spreadsheet is available as a design aid to establish overall plant utility requirements [(6)] for typical systems (refer Figure 8).

The thermal conductivity of the reactor material of construction has a significant effect on wall temperatures, as demonstrated in Section 4, which can limit cycle times. Extreme temperature differences can result in product quality problems on certain processes.

Refer to Appendix I for a review of the heat transfer theory which is further covered in the literature.[(7)] However, for poorly designed jacket services the jacket side film coefficient will become controlling if turbulent conditions are not established. The use of forced circulation and jacket inlet mixing nozzles on thermal fluid systems is essential.

The heat removal capability of the service system is a function of the resistances to heat transfer, the temperature difference between reaction temperature and jacket/coil side temperature and heat transfer area. A thermal runaway (increasing reaction temperature increases rate of reaction) will occur if the heat cannot be removed fast enough, e.g. reduction in heat transfer area due to reduction in reactor contents.

It may not always be possible to design for stability where enough heat transfer area is provided for the design temperature difference. However, stability will be assured if heat is removed by boiling one or more of the components since this tends to make the system isothermal.

The natural period of batch reactors can vary between 15 and 60 minutes (Refer Appendix III) and will increase on approach to instability making control more difficult.

There is extensive literature available on agitation systems with some manufacturer's having proprietary arrangements. The Seider Tate correlation (Appendix I) is used to predict reactor inside film coefficients based on agitation system constants determined empirically.

2.2.2 Overheads

When processing flammable solvents it is standard practice to eliminate explosive mixtures by establishing and maintaining an inert atmosphere in the reactor. Inerting systems can be based on pressure balance or continuous flow. However, when carrying out reactions at reflux the inert flow should be reduced/eliminated to minimise volatile organic compounds (VOCs) emission to the environment. Some reactions involve the evolution of non condensable compounds which will become saturated with VOCs in proportion to the component vapour pressures at the condenser exit temperature and pressure.

The presence of non condensables in the condenser results in a significant increase in the thermal resistance which can result in up to half the heat transfer area being required for the last zone alone.

ChemCAD Therm uses a method based on Silver [(8)] and Bell & Khaly [(9)] to account for non condensables with wet film and dry film condensing options.

Adopting holistic methods for condenser sizing, e.g. condenser area equal to reactor heat transfer area, can result in significant undersizing when applied to multipurpose plant operations.

3.0 CONTROL CONFIGURATIONS

3.1 **Direct Jacket Heat / Cool** (Scheme 1)

These systems involve the connection of the appropriate supply and return services directly to the reactor jacket/coils. Systems are in use providing operating ranges from –20°C to 180°C with ethylene/glycol mixes, water and steam as services. Ethylene glycol mixes should not be used above their boiling point.

There are many arrangements in use from total manual control to full automatic control involving forced circulation with steam/water mixing facilities. Ciba Geigy and Wiegand developed a steam jet heater providing a wide range of heating duties with a single phase in the operating range 5°C to 180°C. This arrangement requires careful design in relation to air removal/expansion/pressurisation facilities and service returns from high operating temperatures require special automatic blowdown facilities.

These systems provide excellent thermal response due to the elimination of heat transfer lags associated with heat exchangers. However, to provide combined heating/cooling facilities, with the exception of the Wiegand system, requires involved automatic valve sequencing and jacket/coil blowdown routines when changing services resulting in discontinuous control which can cause serious operational problems when handling exothermic reactions.

Operational problems associated with these systems include cross contamination of services, corrosion and the need for complex control routines when changing services from heat to cool involving time lags. These systems are not always cheaper than other alternatives.

It is now considered standard practice to use single fluid systems based on heat transfer fluids with external heat exchangers.

3.2 **Direct Jacket Cool/Indirect Heat** (Scheme 2)

This system is based on the use of a single appropriate heat transfer fluid for the desired operating range, typically –20°C to 180°C.

The coolant is directly injected into the reactor jacket/coil circulating loop and a heat exchanger with steam is provided for heating. Changeover between heating and cooling modes is seamless using control valves in split range.

Thermal response on cool is excellent due to direct injection and the use of a three way valve on the heat exchanger minimises thermal lags on heating.

Adopting a three way valve allows the steam to be applied continuously to the heat exchanger shell at full pressure which eliminates problems associated with condensate lift/return, prevents freezing when operating below 0°C and provides excellent linear control characteristics.

These systems require careful consideration to ensure thermal expansion is allowed throughout the loop.

Equipment in common use include sealless pumps and gasket free fully welded plate and shell heat exchangers.

On initial commissioning these systems have to be thoroughly dried out to prevent operational problems and equipment damage. Water breakthrough due to contamination or equipment failure will result in considerable downtime.

The key design parameters to be determined are circulation rate and heat exchanger sizing. The circulation rate is set depending on the number of mixing nozzles to be supplied and achieving the recommended nozzle pressure drop. The heat transfer fluid is on the plate side of the shell and plate heat exchanger, which provides a high film coefficient.

The heat transfer area is selected based on a reasonable LMTD at approach to service supply temperature and is sized to ensure that reactor heat transfer is limiting.

ChemCAD modelling of the system establishes the thermal response of the system selected.

3.3 **Indirect Jacket Heat/Cool** (Scheme 3)

The key features of this system are as for the previous Scheme 2. However, the use of an additional heat exchanger for cooling allows the selection of a less expensive fluid for the cooling service which may provide cost benefits with a centralised refrigeration facility involving the use of significant volumes of heat transfer fluid.

This system also allows for segregation of the reactor service system from other reactors which enables rapid identification of water breakthrough problems on a facility with several reactors.

3.4 Instrumentation and Control

Control systems for Schemes 2 and 3 only are considered.

The conventional control system uses cascade control with reactor contents temperature (master/primary) being cascaded to jacket/coil inlet/outlet temperature (slave/secondary). This system provides the following benefits:-

1. Disturbances in the jacket/coil loop are corrected by the secondary controller before they can influence the primary controller. However, the secondary loop thermal time constant must be less than the primary loop thermal time constant, which is in fact the case (refer Appendix III).

2. Primary loop speed of response is enhanced due to reduction in phase lag.

3. Secondary loop gain variations are overcome within its own loop.

The secondary controller is ideally a Proportional only controller as Integral Action Time will slow the response. A proportional band of $\leq$ 25% is typical. However, when carrying out boil up control it is desired to set a temperature difference between jacket/coil and reactor contents by controlling jacket/coil inlet temperature. In this mode Integral Action is required to eliminate offset.

The primary controller is Proportional + Integral + Derivative and presents special problems for initial loop tuning and operation. Refer to Appendix III for a detailed discussion.

Temperature measurement is invariably by resistance sensor in conjunction with Smart transmitters which allows considerable flexibility when setting ranges. There is hardly any thermal lag associated with the sensor, however, there can be significant thermal lags associated with the thermowell if incorrectly designed or installed which can lead to an uncontrollable system. Designs are available which ensure fast response and should be adopted.

Control valve actuators are pneumatic with positioners fitted. The calibration for split range operation of the valves should be achieved at the positioners, not with scaled multiple controller outputs, to ensure loop integrity is maintained. Control valve characteristic used is normally equal % though situations may arise where a linear characteristic provides better control. Refer to Appendix II for further discussions.

ChemCAD provides the facilities to carry out extensive modelling of the control loop responses for all operational modes and establishes the system stability characteristics.

4.0 Performance Prediction

Reactor performance predictions are shown in the Attachments. The model used is essentially Scheme 3 (Figures 2, 3) with external heat exchangers.

The reactor studied was a 1600L Hastelloy C Reactor with a single jacket and reactor contents were based on 1000 kg toluene.

The heat transfer fluid selected was Dowtherm J with flowrates as indicated in Figure 3.

Figure 9 indicates the Plot Options available with ChemCAD Reacs.

The external heat exchangers UA are as indicated in Figures 2 and 3 and are based on Vahterus plate and shell type units.

The Graphs 1 – 5 demonstrate that a wide range of performance characteristics can be studied including:-

- Heat up and cool down rates (Graphs 1, 3).
- Heat transfer rates (Graphs 1, 3).
- Heat transfer coefficients (Graphs 1, 3).
- Boil up rates (Graph 2).
- Condenser emission rates (Graph 2).
- Reactor stability under exothermic conditions (Graph 3).
- Control system tuning (Graphs 4, 5).

Graphs 4 and 5 demonstrate the use of the Ziegler Nichols tuning method for the Condenser Model (Figures 4 and 5) as discussed in Appendix III.

CCReacs allows detailed Sensitivity analyses to be performed.

- Optimum heat exchanger sizing.
- Jacket temperature and heat up/cool down rates.
- Jacket temperature and boil up rates.
- VOC emission and inert flow rate.
- Condenser performance criteria.
- Heat removal capability and exotherm stability.
- Optimisation of control system parameters.

The possibilities available are extensive and depend very much on the initiative of the user and the particular problem being studied.

Appendix I

Acknowledgements to Pfaudler Reactor Systems for permission to reproduce this information

Summary of Heat Transfer in Glass Lined Reactors

Inside film coefficient h_i

For a three bladed impellor agitator the inside film coefficient h_i is predicted by

$$\mathrm{Nu} = 0.33 * (\mathrm{Re})^{0.67} (\mathrm{Pr})^{0.33} \left(\frac{m_{bulk}}{m_{wall}} \right)^{0.14}$$

Where

Nu = Nusselt Number = $\frac{h_i D}{k}$

Inside film coefficient	h_i	Btu/ft^{2}h°F
Inside reactor diameter	D	ft
Thermal conductivity of process fluid	k	Btu/ft^{2}h°F/ft

Re = Reynolds Number = $\frac{r n d^2}{m}$

Impellor rotation rate (normal 90 rpm)	n	rpm
Impellor diameter	d	ft
Process fluid density	r	consistent units
Process fluid viscosity	m	consistent units

Pr = Prandtl Number = $\frac{C_p m}{k}$

Process fluid specific heat	C_p	consistent units

Normally the viscosity ratio term $\frac{m_{bulk}}{m_{wall}}$ is unity and can therefore be ignored.

Glass wall

For heat transfer through glass linings use $\frac{k_g}{L_g}$

Where k_g = thermal conductivity of glass = 6.9 Btu/ft^{2}h°F/in

L_g = glass thickness (in)

Glass thickness can very between 1 mm and 2 mm. Use 1.5mm(0.06in) thick as a good average.

Metal wall

Physical properties of common reactor materials are as follows

	Density(kg/m^3)	Specific Heat(kJ/kgK)	Thermal Conductivity(w/mK)
Hastelloy C	8690	0.423	11.1
Stainless steel	8000	0.5	16.2
Carbon steel	8000	0.4	52(360 Btu/ft^{2}h°F/in)

L_m=metal wall thickness (in)

Overall conductivity (k_o) for a glass lined vessel is given by (CCReacs allows only one value)

$$k_o = \frac{L_m + L_g}{L_g/k_g + L_m/k_m}$$

Outside film coefficient h_o

For steam on the jacket side take an outside film coefficient of 8517 w/m^{2}K (1500 Btu/ft^{2}h°F)

For water or other fluid on the jacket side, use the Pfaudler equations or consult the circulating nozzle leaflets.

Fouling coefficients

Fouling on inner vessel	-	allow 5678 w/m^{2}K (1000 Btu/ ft^{2}h°F)	ff_i
Fouling on jacket side	-	allow 5678 w/m^{2}K (1000 Btu/ ft^{2}h°F)	ff_o

or substitute known values.

Overall heat transfer coefficient U

$$\frac{1}{U} = +\frac{1}{h_i} + \frac{1}{ff_i} + \frac{1}{k_g/L_g} + \frac{1}{k_m/L_m} + \frac{1}{h_o} + \frac{1}{ff_o}$$

Rate of Heat Flow	Q	=	UAΔT	Btu/h
Where	U	=	overall heat transfer coefficient	Btu/ ft^{2}h°F
	A	=	heat transfer area	ft^2
	ΔT	=	log mean temperature difference	^{0}F

Heat transfer process side

Seider Tate correlation

$$Nu = C\,Re^{0.667}\,Pr^{p}\left(\varsigma_p/\varsigma_w\right)^{q}$$

$$Nu = \frac{h_i D}{k} \qquad Re = \frac{nd^2}{\grave{\imath}} \qquad Pr = \frac{Cp\grave{\imath}}{k}$$

C,p,q	=	constants for Agitator
Nu	=	Nusselt number
Re	=	Reynolds number
Pr	=	Prandtl number
D	=	Vessel internal diameter
d	=	Agitator diameter
n	=	RPM of agitator
h_p	=	process side dynamic viscosity
h_w	=	process side wall viscosity
k	=	process side thermal conductivity
h_i	=	heat transfer coefficient, product side
Cp	=	process fluid specific heat

Agitator Constants

	AGITATOR TYPE	C	p	q	RANGE
ONE PIECE	IMPELLER	0.33	1/3	0.14	$2\times10^4 < Re < 2\times10^6$
	ANCHOR	0.55	1/4	0.14	$5\times10^3 < Re < 4\times10^4$
	TURBINE (6 BLADES)	0.44	1/3	0.24	$200 < Re < 1\times10^3$
	LOOP	0.36	1/3	0.14	$300 < Re < 4\times10^4$
CYRO LOCK	CBT – TURBINE	0.48	1/3	0.14	$2\times10^4 < Re < 2\times10^6$
	FBT – TURBINE	0.69	1/3	0.14	$400 < Re < 3\times10^5$
	PBT – TURBINE	0.62	1/3	0.14	$300 < Re < 3\times10^5$
	TURBOFOIL	0.55	1/3	0.14	$1\times10^3 < Re < 1\times10^6$

Typical overall heat transfer coefficients U for steam heating

Product	XL 3410(L)	RA60 1360(L)	RA60 2270(L)	RA84 9090(L)	RA96 13640(L)	hi
Water	70	68	68	68	67	659
Toluene	59	55	55	55	56	232
Chloroform	60	57	57	57	57	259
Ethyl alcohol	57	54	54	53	54	213
Methyl alcohol	62	58	58	59	59	302
Acetone	62	59	59	58	58	284

Overall heat transfer coefficients units Btu/h ft^2 ^{0}F

Assumptions:		
	glass thickness	1.5 mm
	fouling steam side	3333 Btu/h ft^2 ^{0}F
	fouling process water	1000 Btu/h ft^2 ^{0}F
	fouling organic solvents	1000 Btu/h ft^2 ^{0}F
	impeller speed	90 rpm

h_i = process side inside film coefficient (last column above)

h_o = jacket side film coefficient

for steam	1500 Btu/h ft^2 ^{0}F
for water	500 Btu/h ft^2 ^{0}F
for heat transfer fluid	250 Btu/h ft^2 ^{0}F
for glycol/water mix	30 Btu/h ft^2 ^{0}F (chilling)

$$\frac{1}{U} = +\frac{1}{h_i} + \underbrace{\frac{1}{1000}}_{ff_i} + \frac{1}{k_g/L_g} + \frac{1}{k_m/L_m} + \frac{1}{h_o} + \underbrace{\frac{1}{3333}}_{ff_o}$$

$$\frac{1}{k_o/L_o} = \frac{1}{k_g/L_g} + \frac{1}{k_m/L_m} = \frac{1}{117} + \frac{1}{600}$$ (symbols as above)

<u>Overall heat transfer for thermal fluid on the jacket side</u>

Let U_S = overall heat transfer coefficient for steam h_o =1500 for steam

U_O = overall heat transfer coefficient for oil h_o = 250 for oil

$$\frac{1}{U_o} = \frac{1}{U_s} - \frac{1}{1500} + \frac{1}{250}$$

Appendix II

Control Valve Characteristic Selection [3]

The selection of a control valve with the appropriate operating characteristics is essential for satisfactory control loop performance. A valve has two characteristics namely the inherent characteristic (relationship between flow and stroke at constant ΔP) and the operational characteristic where the inherent characteristic is modified by the process pressure conditions.

An equal % valve operating characteristic tends towards a linear characteristic as ΔP max/ΔP min increases. A linear valve operating characteristic tends towards a quick opening characteristic as ΔP max/ΔP min increases.

The operational characteristic of a valve can also be modified by controller output signal characterisation using various techniques.

The graph of valve stem position vs flow demonstrates the range of valve characteristics available (refer Figure 6).

The following is a summary of selection criteria in good industrial practice:-

Process Variable	Δ Pmax / Δ Pmin	Characteristic
Temperature	< 2	Equal %
Pressure	Constant < 2	Linear Equal %
Level	< 2½ > 2½	Linear Equal %
Flow (linearised)	< 2½ (Note 1) > 2½ (Note 2)	Linear Equal %

Note 1 Value ΔP at flow maximum > 40% system ΔP
Note 2 Value ΔP at flow maximum < 40% system ΔP

ΔP max will be close to maximum shutoff ΔP and ΔP min at full flow should not be underestimated which favours equal % characteristic.

ChemCAD allows dynamic analysis of the process enabling appropriate characteristic selection.

Appendix III

Control Loop Tuning

When tuning control loops it is important to understand the impact the tuning parameters have on the process.

The minimum effective values are:-

Proportional Band	(PB%)	highest value (minimum gain)
Integral Action Time	(T_i min)	longest time
Derivative Action Time	(T_d min)	shortest time (or off)

The following ground rules should always be considered:-

1. Proportional Band

Wide PB (50 – 500%) on fast and noisy processes such as Flow, Liquid Pressure and Composition.
Narrow PB (1- 50%) on slow processes such as Gas Pressure, Temperature and Vapour Pressure.

2. Integral Action Time (T_i)

Integral action time changes the controller output at a rate proportional to the magnitude of the error (e) and should never be set so short such that the resulting load change imposed exceeds the load response characteristics of the process. (Consider approaching a corner too fast).

Short T_i (0.05 – 2 min) on fast and noisy processes such as Flow and Liquid Pressure.

Long T_i (2 – 120 min) on slow processes such as Temperature, Vapour Pressure and Composition.

T_i is unnecessary on Gas Pressure and is seldom used on Liquid Level as steady flow is usually the required condition.

3. Derivative Action Time (T_d)

Derivation Action Time changes the controller output at a rate proportional to the rate of change of error $\left(\frac{de}{dt}\right)$ and as such should never be used on noisy processes such as Flow, Liquid Pressure and Liquid Level.

T_d is used on Temperature, Vapour Pressure and Composition and should be set conservatively (short T_d) to protect against control instability resulting from unanticipated load changes. T_d set in the range $\frac{T_i}{4} < T_d < \frac{T_i}{2}$ is considered reasonable.

4. Integral Action Time Saturation (Windup)

When a sustained error is maintained between set point and measured variable on a controller with T_i the output is driven off scale (valve full open or closed).

Control action does not commence until the measured variable crosses the set point resulting in overshoot.

This condition is typical of heating/cooling a batch reactor to a desired temperature and composition endpoint control.

Controllers incorporating Proportional and Derivative modes overcome this problem.

5. Controller Loop Tuning Method

Ziegler and Nichols [4] developed the Ultimate Sensitivity Method which provides a useful basis for control loop tuning as follows:-

1. Set the control modes to their minimum effective values.
   Maximum PB, maximum T_i, minimum T_d (or off).

2. Reduce PB whilst making small set point changes (both directions) until the measured variable begins to oscillate at constant amplitude.
   The proportional band PB_u and the period T_u are noted.

3. Initial controller settings proposed are:-

P only controller

$$PB = 2\,PB_u\,\%$$

P + I controller

$$PB = 2.2\,PB_u\,\%$$

$$T_i = \frac{T_u}{1.2}\ \text{mins}$$

P + I + D controller

$$PB = 1.6\,PB_u\,\%$$

$$T_i = \frac{T_u}{2}\ \text{mins}$$

$$T_d = \frac{T_u}{8} = \frac{T_i}{4}$$

This procedure can be used as a 'starting point' for tuning control systems on batch processes, T_u being established at a stable condition. Typical periods (T_u) for batch reactors vary in the range 15 to 60 minutes.

Fine tuning involves a trade off between the conflicting requirements of heat up/cool down to a set point, control of exothermic reactions at a set point, controlling on jacket temperature to achieve required boil up rates and constraints associated with wall temperature requirements.

6. Reactor Time Constant Estimation[1] (pages75to76)

$$Q = h_1 A \left(T - T_1\right) + W_1 C_1 \frac{dT}{dt}$$

Batch Reactor Model Parameters

Q	=	rate of heat evolution	
h_1	=	inside film coefficient	387.2 kcal/hm^2 °C
A	=	heat transfer area	4.82 m^2
T	=	reactor temperature	110°C
T_1	=	wall temperature	140°C
W_1	=	weight of reactants	1000 kg toluene
C_1	=	specific heat of reactants	0.478 kcal/kg°C

Rearranging in the standard form we have

$$T + \frac{W_1 C_1}{h_1 A}\frac{dT}{dt} = T_1 + \frac{Q}{h_1 A}$$

The thermal time constant for reactor contents to reactor wall is given by

$$\Gamma_1 = \frac{W_1 C_1}{h_1 A} = \frac{W_1 C_1}{Q}\left(T - T_1\right) \qquad \underline{15.4 \text{ min}} \qquad \frac{1000 \text{ x } 0.478}{387.2 \text{ x } 4.82} = 0.25\text{h}$$

(For 12500L reactor with 25.2m^2 area the thermal time constant becomes 37 min full toluene charge).

The thermal time constant for reactor outside wall to reactor inside wall is given by

$$\Gamma_2 = \frac{W_2 C_2 L}{k\ A} = \frac{W_2 C_2}{Q}\left(T_1 - T_2\right) \qquad \underline{3.1 \text{ min}} \qquad \frac{2500 \text{ x } 0.101 \text{ x } 0.00953}{9.55 \text{ x } 4.82} = 0.052\text{h}$$

W_2	=	weight of wall	2500 kg
C_2	=	specific heat of wall	0.101 kcal/kg°C (Hastelloy C)
k	=	thermal conductivity of wall	9.55 kcal/hm°C
L	=	wall thickness	0.00953 m
T_2	=	outside wall temperature	145°C

The thermal time constant for reactor outside wall to jacket contents is given by

$$\Gamma_3 = \frac{W_3 C_3}{h_3 A} = \frac{W_3 C_3}{Q}\left(T_2 - T_c\right) \qquad \underline{2.6 \text{ min}} \qquad \frac{453 \text{ x } 0.55}{1205 \text{ x } 4.82} = 0.043\text{h}$$

W_3	=	weight of jacket contents	600L Dowtherm J x 755 kg/m^3 = 453 kg
C_3	=	specific heat of jacket contents	0.55 kcal/kg°C
h_3	=	outside film coefficient	1205 kcal/hm^{2}C
T_c	=	average coolant temperature	155°C

The reactor contents time constant based on the overall heat transfer coefficient U as defined in Appendix I is given by:-

$$\Gamma_o = \frac{W_1 C_1}{U \quad A} \qquad \underline{21.7 \text{ min}}$$

W_1 = weight of reactants = 1000kg toluene
C_1 = specific heat of reactants = 0.478 kcal/kg°C
A = area = 4.82 m^2
U = overall heat transfer coefficient = 274 kcal/h m^2°C

By studying the heat up and cool down curves from CCReacs dynamic simulations the thermal response can be characterised where we have:-

Time Constant	Temperature % ΔT
1	63.2
2	87.0
3	95.0
4	98.0

Graph 1 indicates a system T_o of 24 min.

Appendix IV

ChemCAD User Guidance Notes

The following provides a summary of key points to achieve rapid results from the dynamic models.

PID Controller

The controller algorithm is respresentative of a model which does not exhibit interaction between control modes:-

Controller output P_{out} = $$\frac{100}{PB}\left(e + \frac{1}{T_i}\int e\,dt + T_d\,\frac{de}{dt}\right) + P_o$$

Where,
- PB = proportional band %
- T_i = integral action time, min
- T_d = derivative action time, min
- P_o = steady state controller output
- e = error between measured variable and set point

Note when e = O, P_{out} = P_o

The measurement calibrated range in engineering units is converted to a 4 to 20 mA signal C_{in} as a linear or quadratic function. In modern control systems most inputs are now linearised.

Controller output direction in response to an error ($\pm$) is determined by the controller action. (Refer to Figure 7).

Direct action (increasing input / increasing output or decreasing input / decreasing output)
e = $C_{in} - C_{set}$ (level with fail closed valve)

Reverse action (increasing input / decreasing output or decreasing input / increasing output)
e = $C_{set} - C_{in}$ (heating with fail closed valve / cooling with fail open valve)

In completing the dialog box consider the following:-

The controller output can be directed to one valve or two valves for split range operation or another controller set point for cascade operation, assign UnitOp identifiers as appropriate.

The measurement can be derived from a stream or equipment variable. For reaction temperature locate controller in jacket inlet stream and assign Calculated Temperature.

Consider Appendix III when selecting and setting control parameters.

For batch processes set the steady state controller output (P_o) at the simulation start value i.e. full open or full closed control valves.

Control Valve (CVAL)

It is beyond the scope of this note to cover all aspects of this module, refer to ChemCAD CCReacs for a detailed description. However, the following should be taken into consideration:-

If a value for valve flow coefficient C_v is not known use the Equipment Sizing C_v option which will provide a value at stated stream conditions.

Control valve rangeability based on the ratio of maximum to minimum controllable flows depends on the entire control loop. For simulation use 50 for equal % characteristic and 10 for linear characteristic.

For control valve characteristic selection refer to Appendix II.

The control valve action in relation to the controller output signal P_{out} is set as follows:-

Valve open 0 = $A_V P^0_{out} + B_V$

Valve closed 1 = $A_V P^1_{out} + B_V$

Where P_{out} is the equivalent output signal in mA Refer to Figure 7 for typical settings.

The position of CVAL in the model is critical and the rules can be summarized:-

1. It requires inlet (P_i) and outlet (P_o) pressures to be specified where P_i is taken from the inlet stream. P_o can be specified directly or overtaken indirectly by an assigned UnitOp in the model.

2. A mass balance must be maintained around CVAL. To achieve this, locate immediately after a Feed Arrow (direct flow adjust) or after Stream Reference (SREF) or Divider (DIVI) (indirect flow regulation). Dynamic Vessel, Dynamic Reactor and Dynamic Column can also be assigned for indirect flow regulation. The optimal mass flowrate transfer is used to set up Indirect Flowrate Regulation.

Heat Exchanger (HTXR)

HTXR is a steady state UnitOp. To use in Dynamic simulation specify Overall Heat Transfer Coefficient (U) and Heat Transfer Area (A) only. Tubeside and shellside pressure drops can be added.

When rating an existing unit use CCTherm to determine the UA for the duty being considered. This enables confirmation of manufacturer's design data. CCTherm option will not run in Dynamic simulations.

Batch Reactor (BREA)

The following should be considered when completing the dialog boxes:-

Initial Charge

Temperature and pressure at initial state.
Temperature must be below component boiling point or reactor will be considered empty.

Enter one (1) reaction if proposing to enter User heat of reaction.
Enter Mixed phase, liquid phase reaction if considering boil up.
Thermal Mode 5 Specify control systems is the only mode allowing consideration of jackets/coils.
Enter operating pressure for boil up studies.
Complete Feed and Product streams as appropriate.
To enter User heat of reaction create a "dummy" reaction by using the same component for one mole (-1) of reactant to create one mole (1) of product. Enter a frequency factor of 0.01.

Reactor Specification

Enter wall temperature at initial state.
Enter heat transfer data as appropriate with model calculating process side heat transfer coefficient using Seider Tate correlation (refer Appendix 1).

Jacket/Coil Specification

Unbaffled jacket calculated outside film coefficient (h_o) does not assume turbulence. If mixing nozzles fitted enter appropriate h_o from Appendix I.
Set initial conditions in jacket for pressure and temperature.
If jacket is full set initial liquid fraction at one (1).
If this liquid fraction is not set the model assumes the jacket is empty.

Dynamic Menu

Access Dynamic Menu from Run.
Set run time and step size based on batch time and number of integration steps set in BREA general.
Set the Streams and UnitOps to be studied, failure to do this will result in no data being retained.

Plot

Dynamic run curves for variables to be studied are obtained via Plot and Dynamic History options.

REACTOR CONTROL SYSTEMS

Figure 1

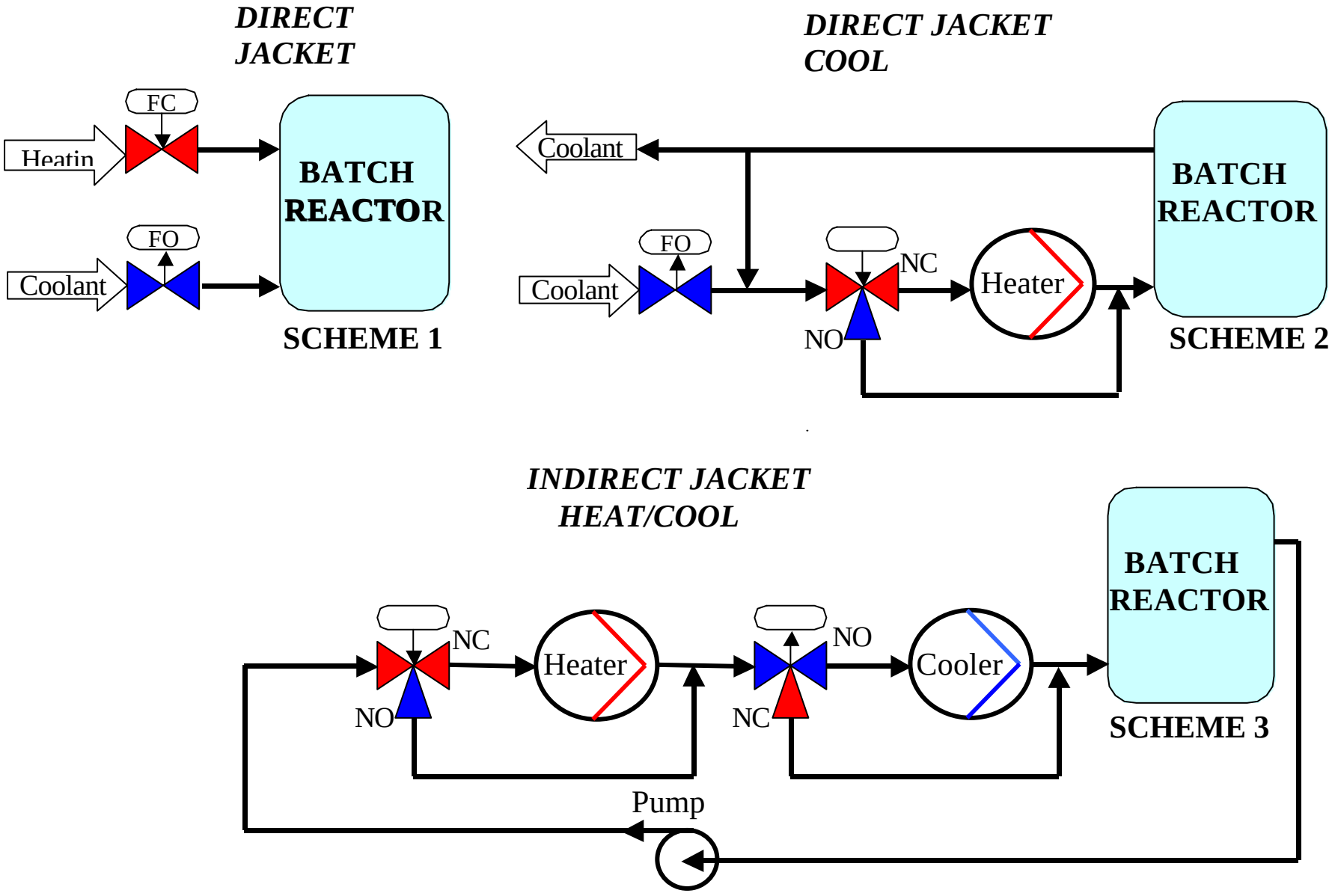

INDIRECT JACKET HEATING SYSTEM SCHEME 3

Figure 2

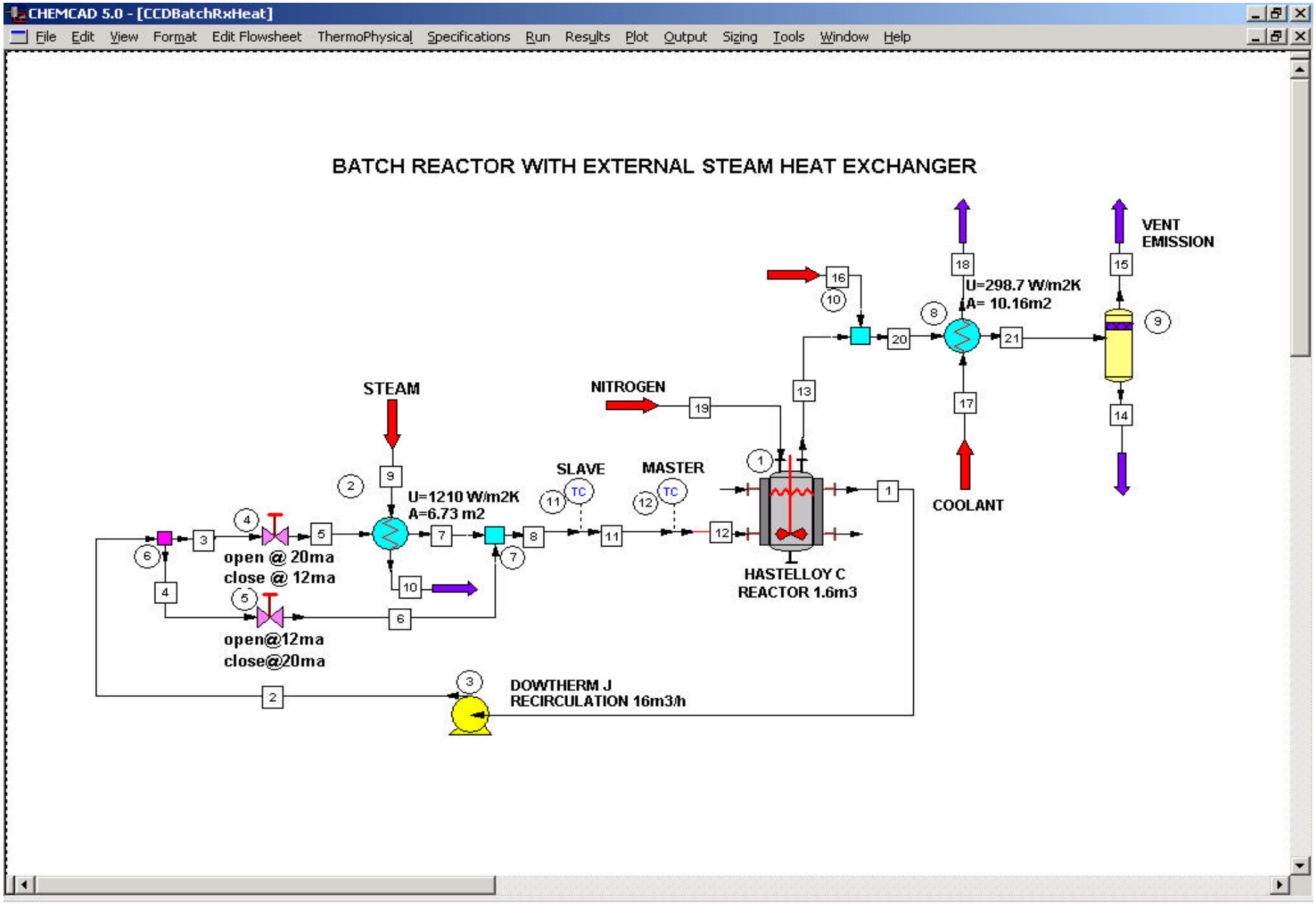

INDIRECT JACKET COOLING SYSTEM SCHEME 3

Figure 3

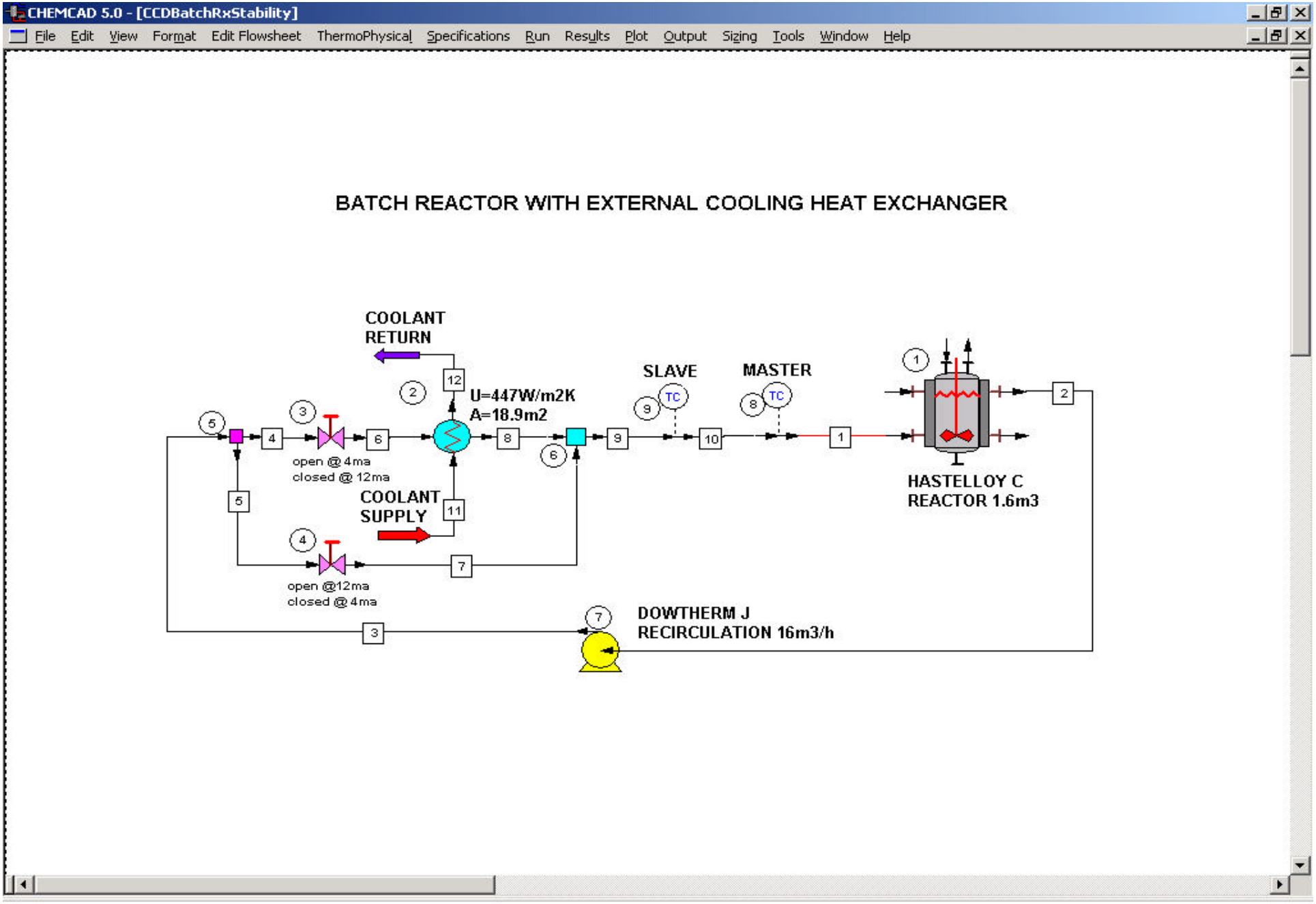

CONDENSER CONTROL SYSTEM

Figure 4

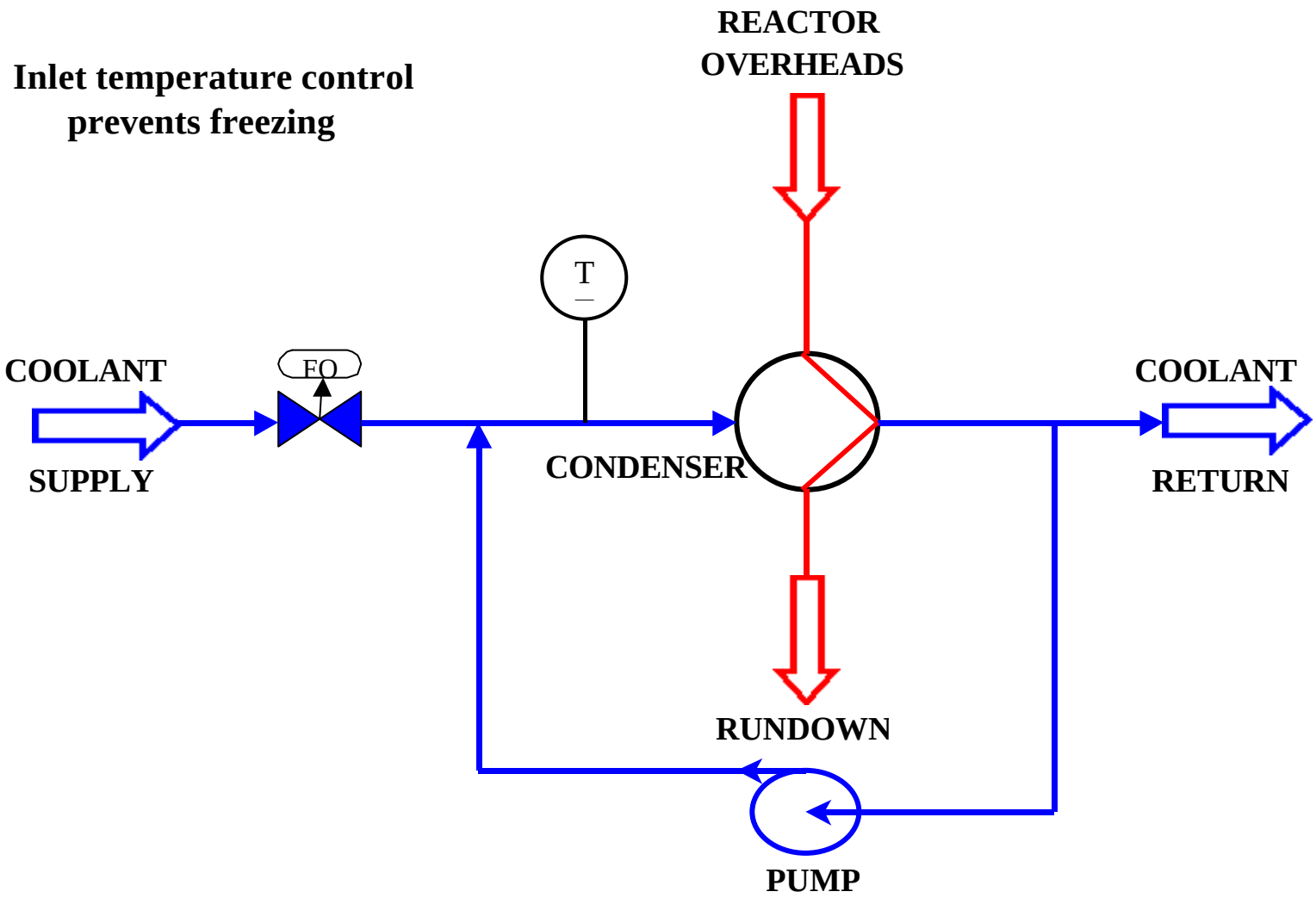

CONDENSER CONTROL SYSTEM MODEL

Figure 5

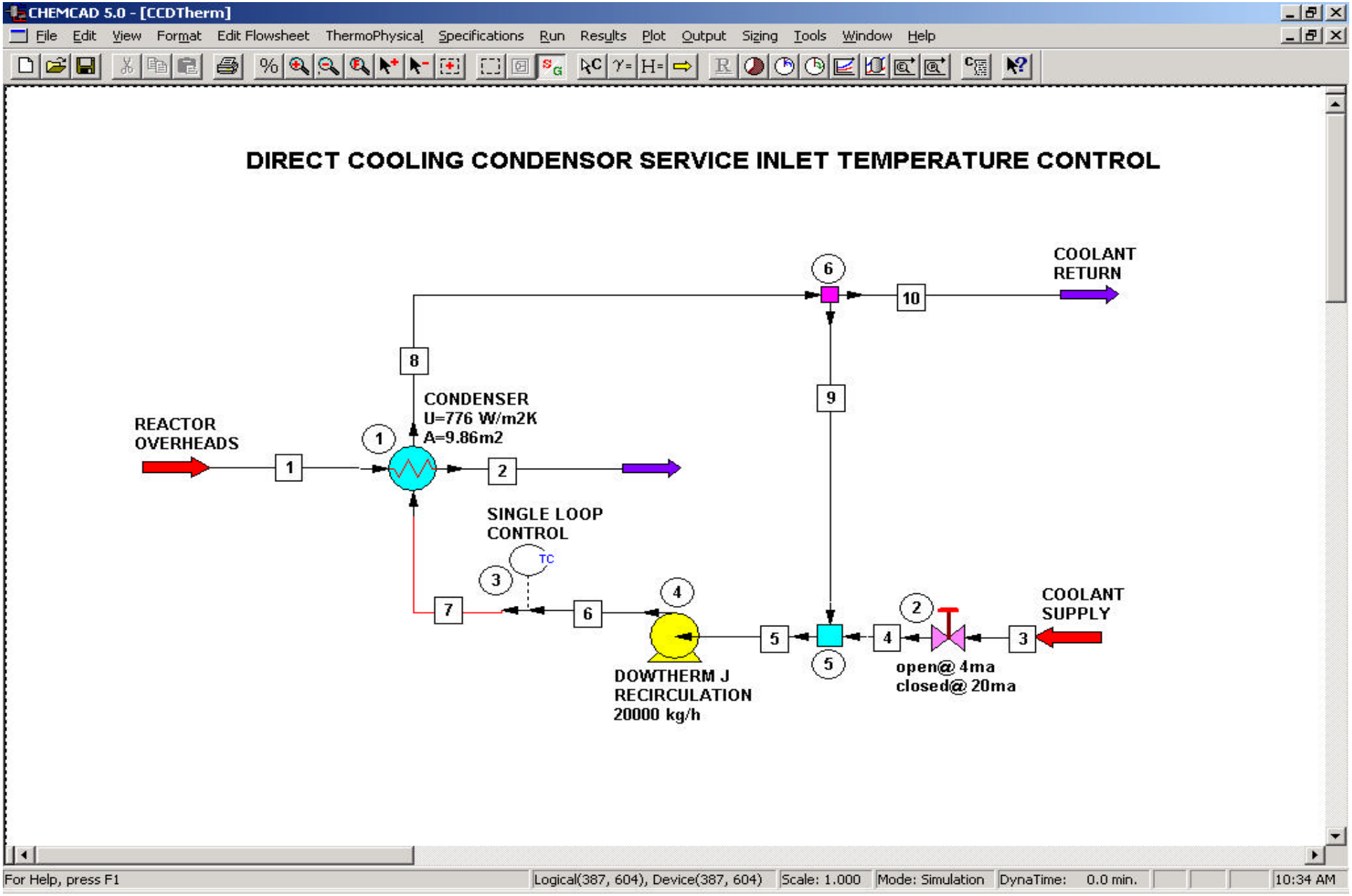

CONTROL VALVE CHARACTERISTICS

Figure 6

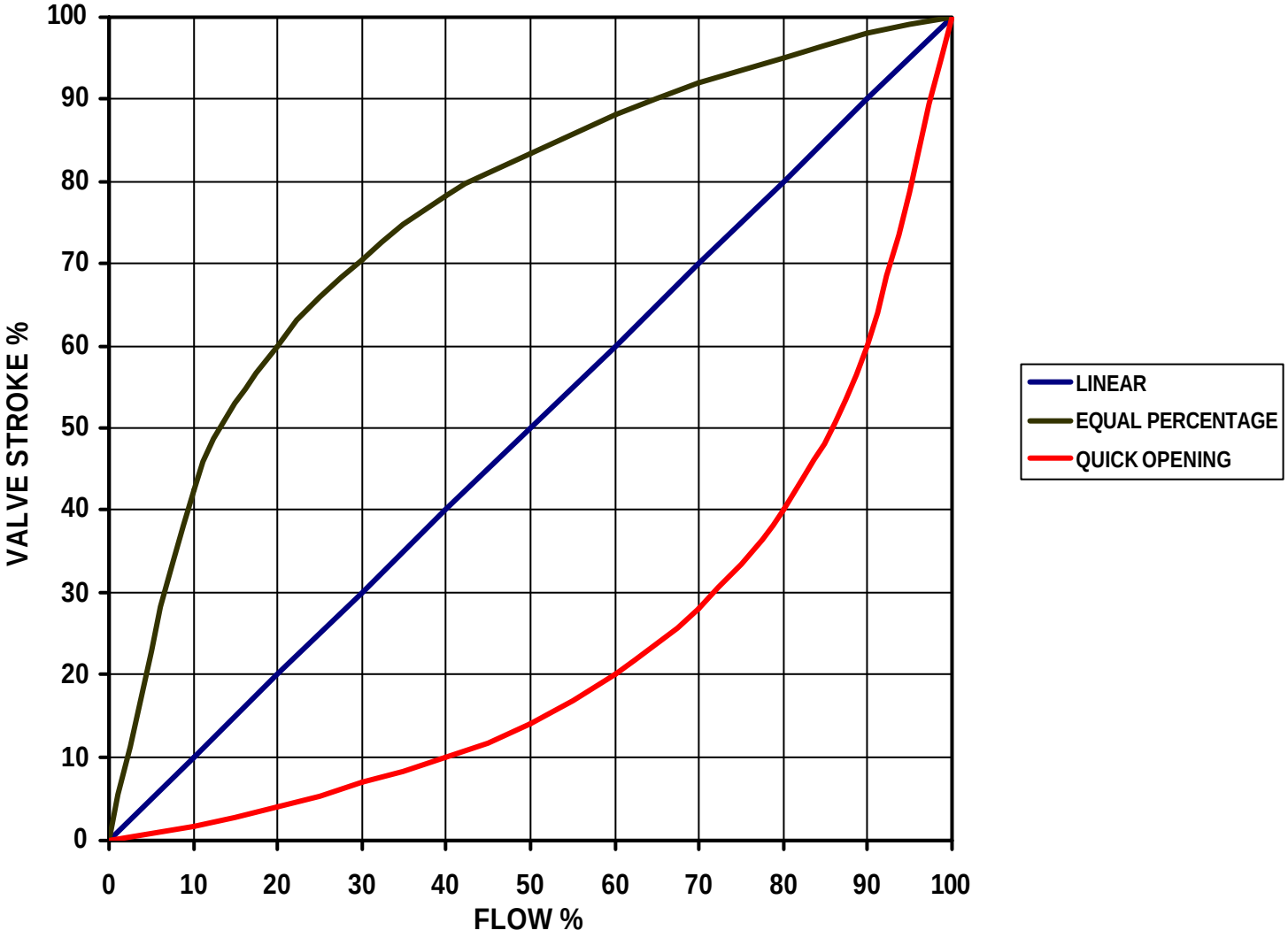

CONTROLLER & CONTROL VALVE ACTION

Figure 7

CONTROL ACTION REVERSE (Heating) **(output 4 to 20 ma dc)**
Increasing Measurement Decreasing Output (Error = Xset– X)
CONTROL ACTION DIRECT (Cooling)
Increasing Measurement Increasing Output (Error = X–Xset)

SINGLE VALVE ACTIONS	**output**	**position**	**state**	**logic**
FAIL CLOSED	4 (0%)	closed	0	0 = Av* 4 + Bv
Av=0.0625 Bv= -0.25	20(100%)	open	1	1 = Av*20 + Bv
FAIL OPEN	4 (0%)	open	1	1 = Av* 4 + Bv
Av= -0.0625 Bv= 1.25	20(100%)	closed	0	0 = Av*20 + Bv
SPLIT RANGE VALVE ACTIONS				
COOLING	4 (0%)	open	1	1 = Av* 4 + Bv
Av= -0.125 Bv = 1.5	12 (50%)	closed	0	0 = Av*12+Bv
HEATING	12 (50%)	closed	0	0 = Av*12+Bv
Av = 0.125 Bv = -1.5	20(100%)	open	1	1 = Av*20 + Bv

REACTOR THERMAL RATING SPREADSHEET

Figure 8

Microsoft Excel - XLBREACTHERM

File Edit View Insert Format Tools Data Window Help

V58 =

P & I Design Ltd

www.pidesign.co.uk

Batch Reactor Thermal Rating

Version 4.1

P & I DESIGN

Project:
Process:
Operation:
Document:
Signatory:
Issue:
Date:

Reactor Jacket Fluid

Species			
DOWTHERM J			
Jacket Side Volume	0.428	m^3	
Minimum Temperature	-20	°C	
Maximum Temperature	150	°C	

Reactor Contents

Species	MW kg / kmol	BP (Atm) °C	Latent kJ / kg
ACETONE	58.08	56.25	512.60

Temperature °C	Specific Hea kJ/kg°K	Density kg / m³
60	2.2996	743.6

Reactor Parameters

Material		
STAINLESS STEEL		
Reactor Volume	1.00	m^3
Heat Transfer Area	4.6	m^2
Reactor Weight	2040	kg

Reactor Thermal Data

Specific Heat		0.414	kJ/kg°K
Contents Temperature		Overall Heat Transfer Coefficient	
-20	°C	0.263	kw/m²K
150	°C	0.438	kw/m²K

Reactor Operation

Mode: HEATUP

Increment		°C			
Jacket Inlet Temperature		°C			
Contents Minimum Temperature		°C	Thermal Duty Maximum	0	kw
Contents Maximum Temperature		°C	Thermal Duty Minimum	0	kw
Heat Up Time	0.00	m			
Mean Rate	0.00	°C/m			

Mode: BOILUP

Increment		°C	Reflux Heat Balance Parameter			
			0.675	0.00	0.00	
			Adjust	Until above cells equal		
Contents Temperature		°C		No Subcoo	Subcool	
Jacket Inlet Minimum Temperature		°C	Condenser Duty	0	0	kw
Jacket Inlet Maximum Temperature		°C	Condenser Duty	0	0	kw
Rundown Temperature		°C				
Boilup No Reflux Minimum	0.00	kg/h	Boilup Total Reflux Minimum	0	kg/h	
Boilup No Reflux Maximum	0.00	kg/h	Boilup Total Reflux Maximum	0	kg/h	

Mode: COOLDOWN

Increment		°C			
Jacket Inlet Temperature		°C			
Contents Minimum Temperature		°C	Thermal Duty Minimum	0	kw
Contents Maximum Temperature		°C	Thermal Duty Maximum	0	kw
Cooldown Time	0.00	m			
Mean Rate	0.00	°C/m			

Mode: EXOTHERM

MW kg / kmo	Heat of Reaction kJ / kmol	Charge kg	Rx Time h	Heat Evolution kJ/h	kw
				0	0.0

Contents Temperature		°C	Heat Removal Duty	Boilup Thermal Duty		
Jacket Minimum Temperature		°C	0.0	kw	0.0	kw
Jacket Maximum Temperature		°C	0.0	kw	0.0	kw

BATCH REACTOR PLOT OPTIONS

Figure 9

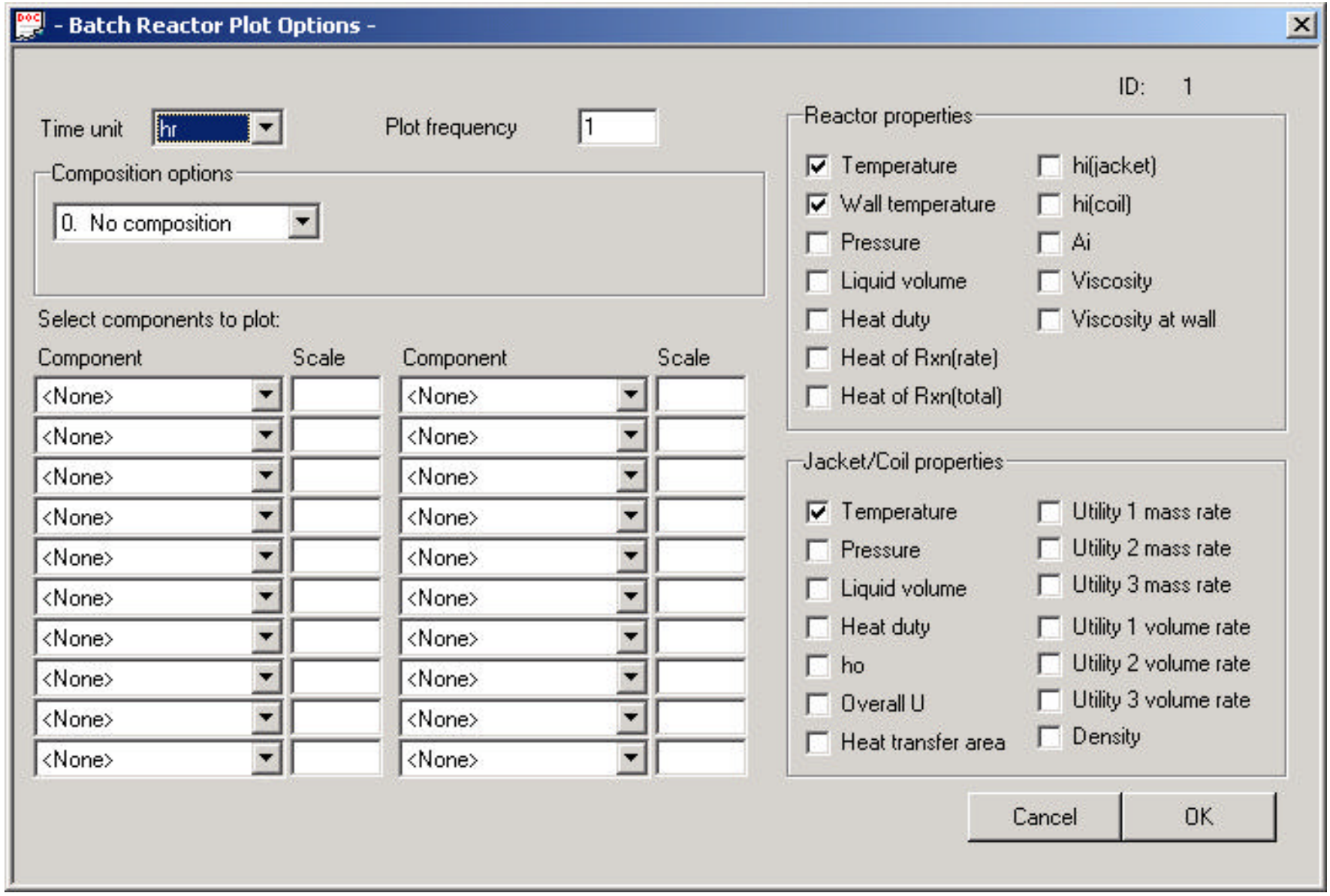

1600L HASTELLOY REACTOR HEAT UP Graph 1

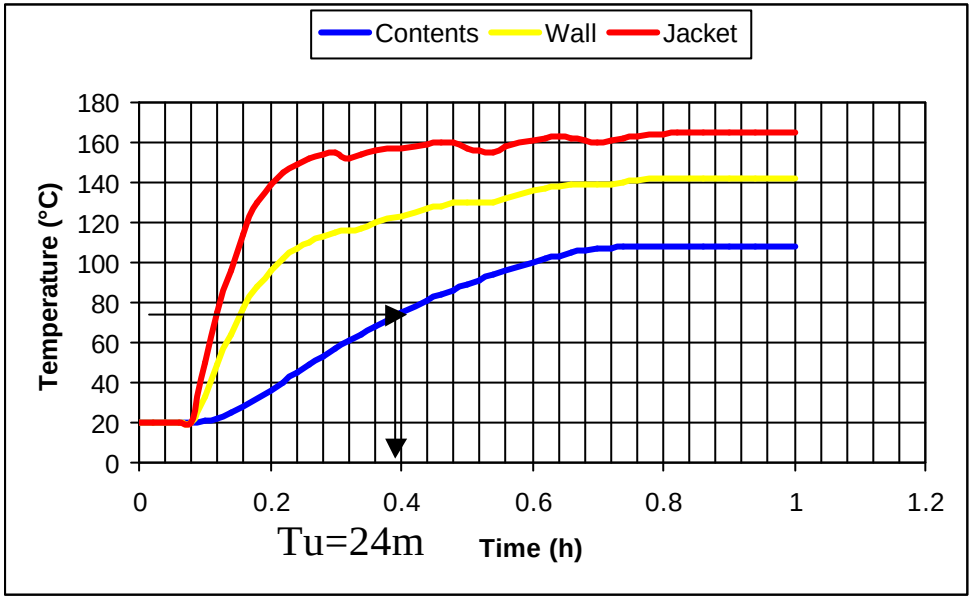

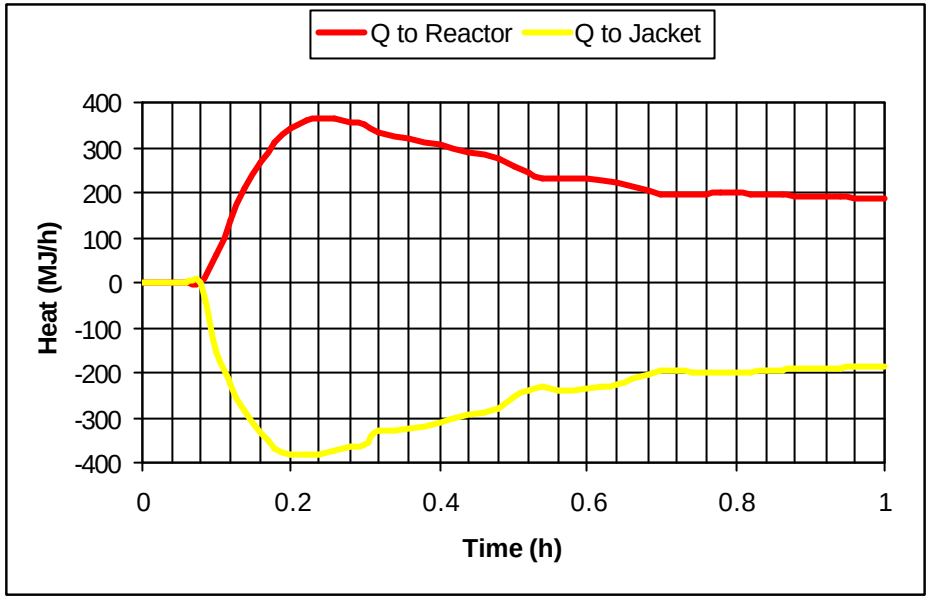

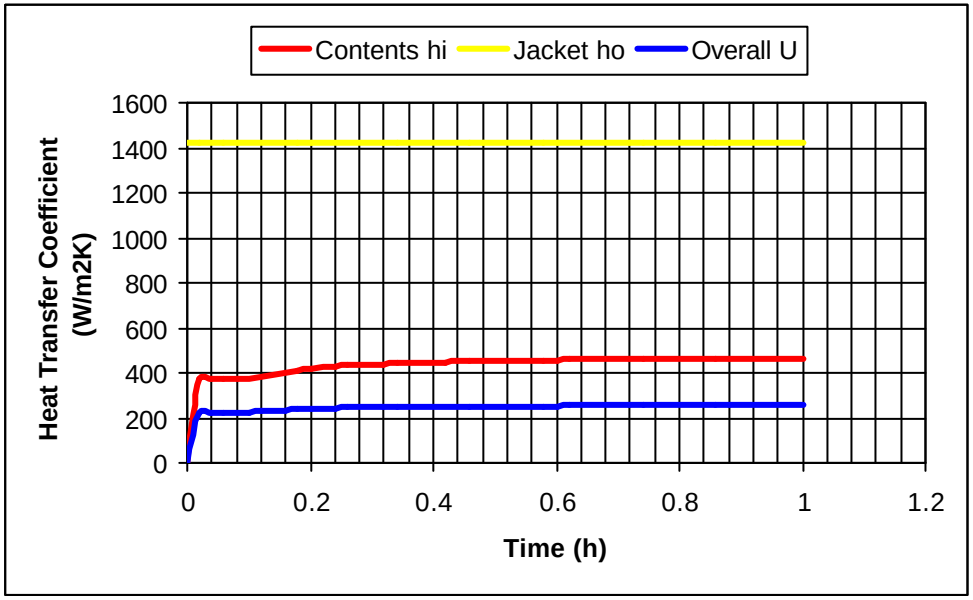

1600L REACTOR BOIL UP/EMISSION Graph 2

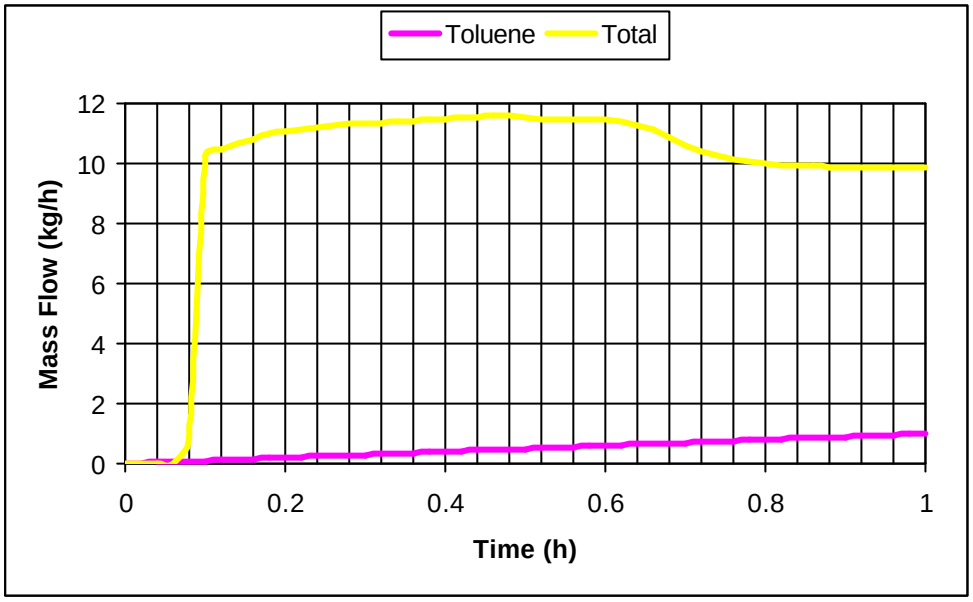

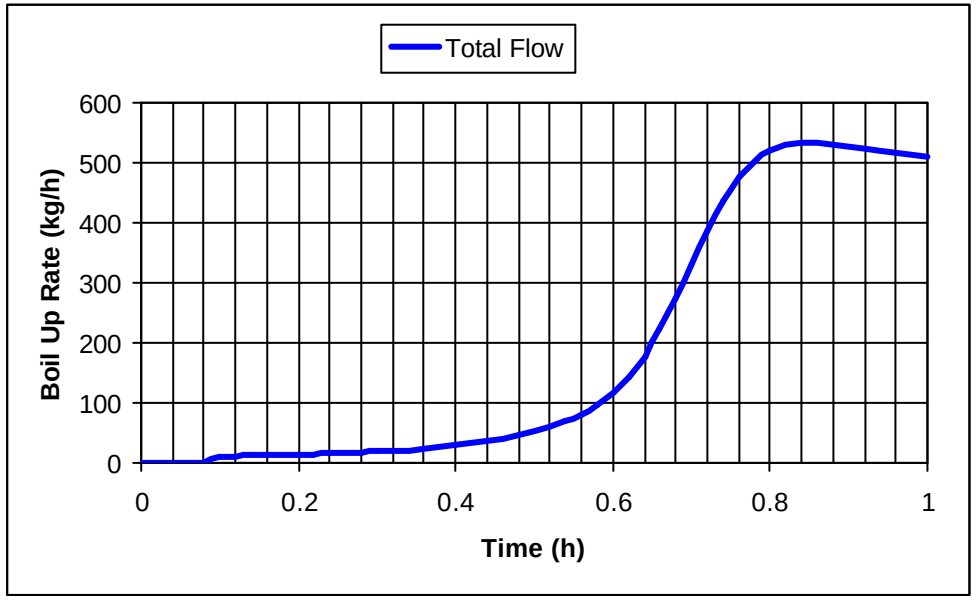

1600L HASTELLOY REACTOR COOLDOWN Graph 3

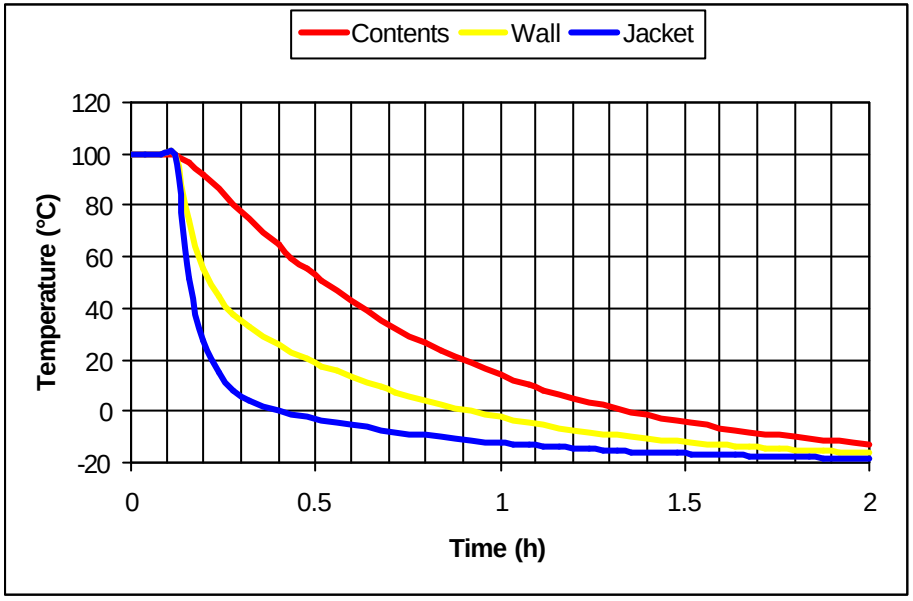

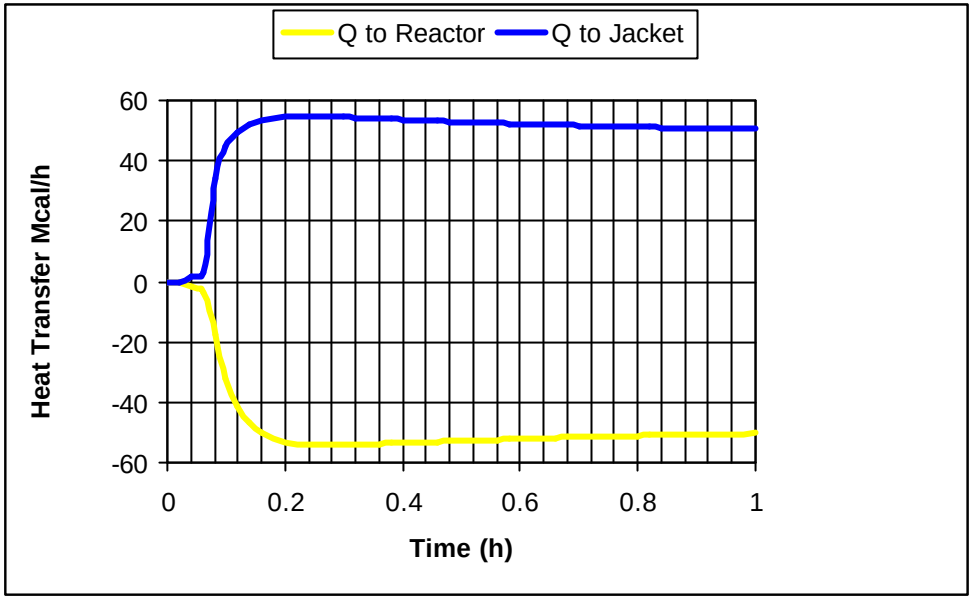

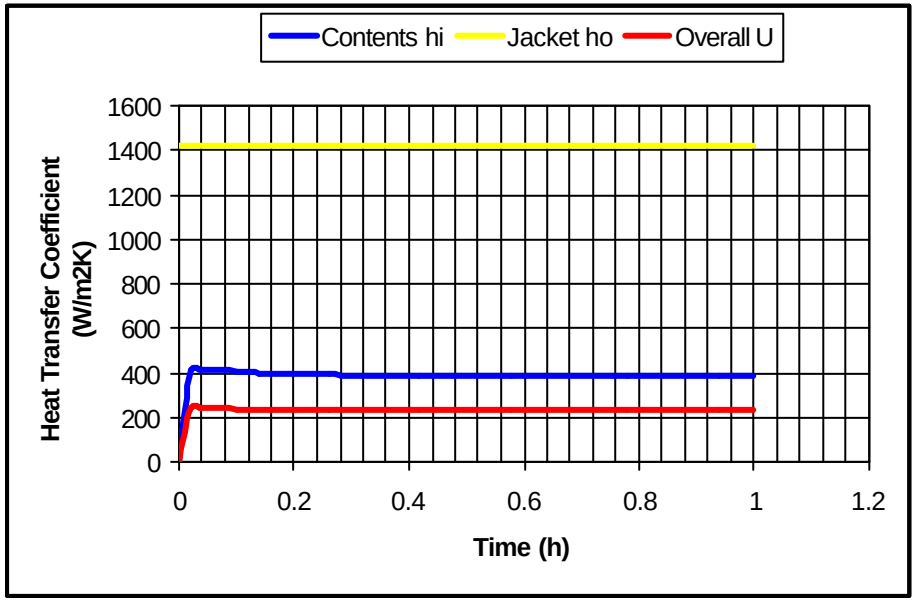

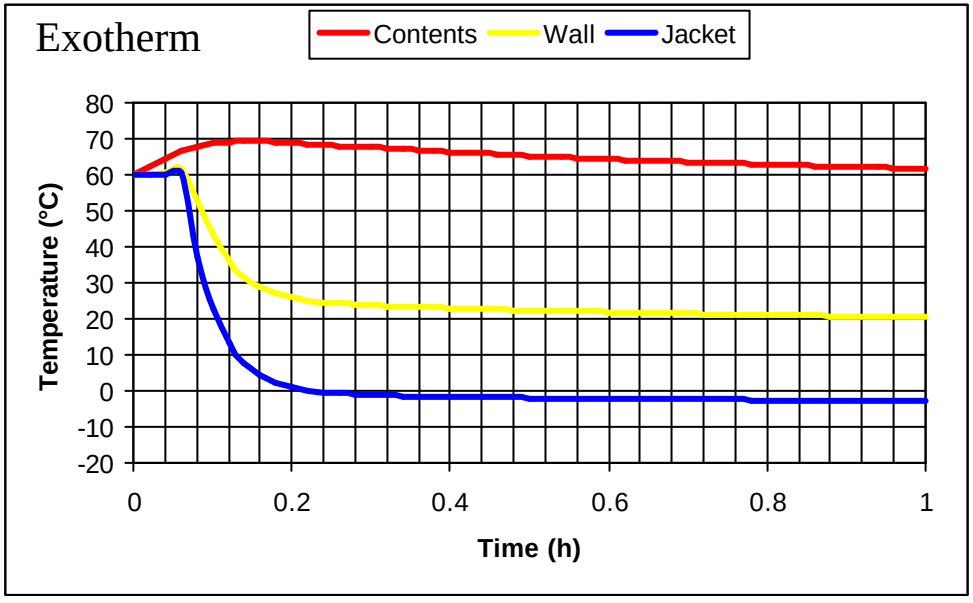

CONDENSER MODEL CONTROLLER TUNING Tu Graph 4

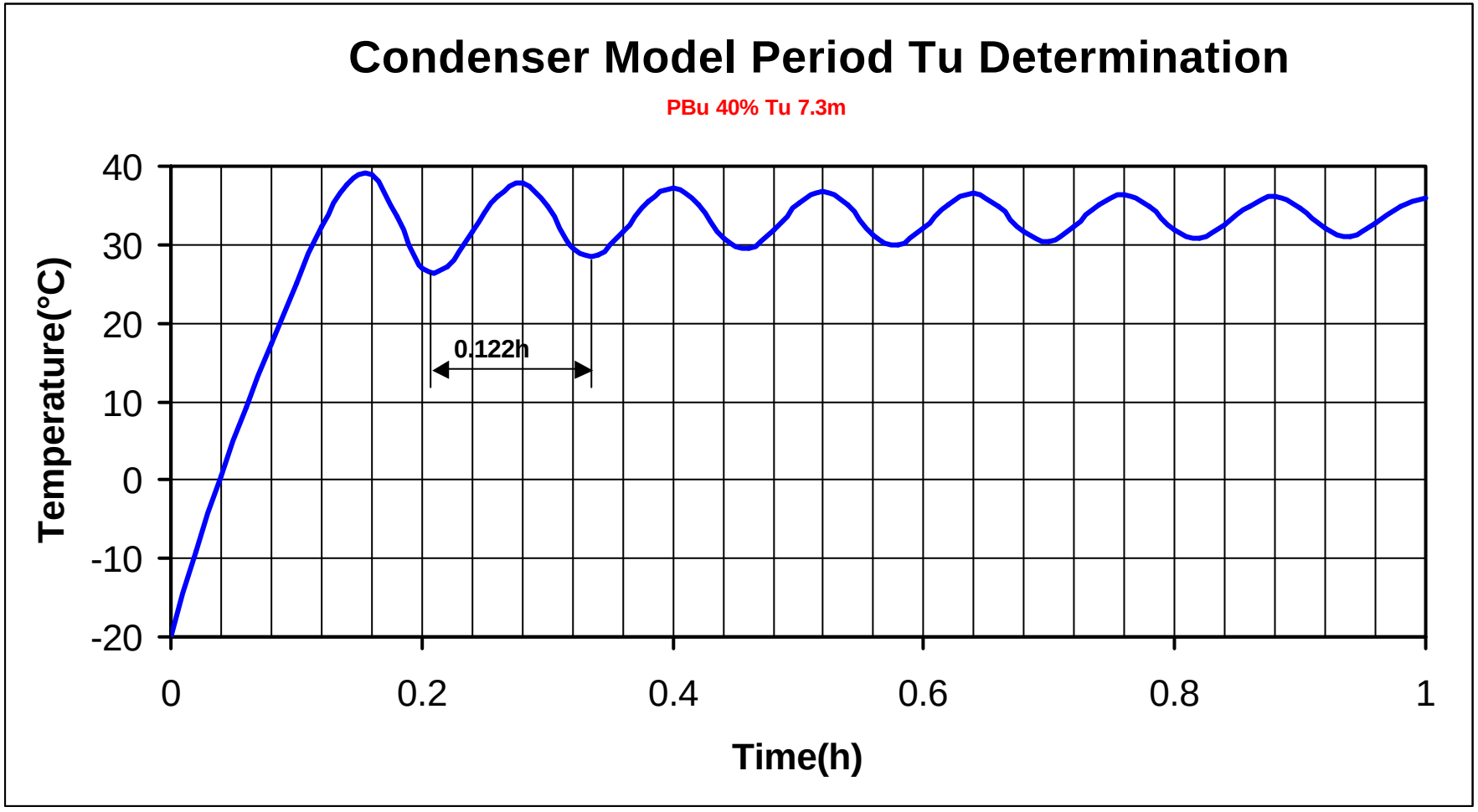

CONDENSER MODEL CONTROLLER TUNING
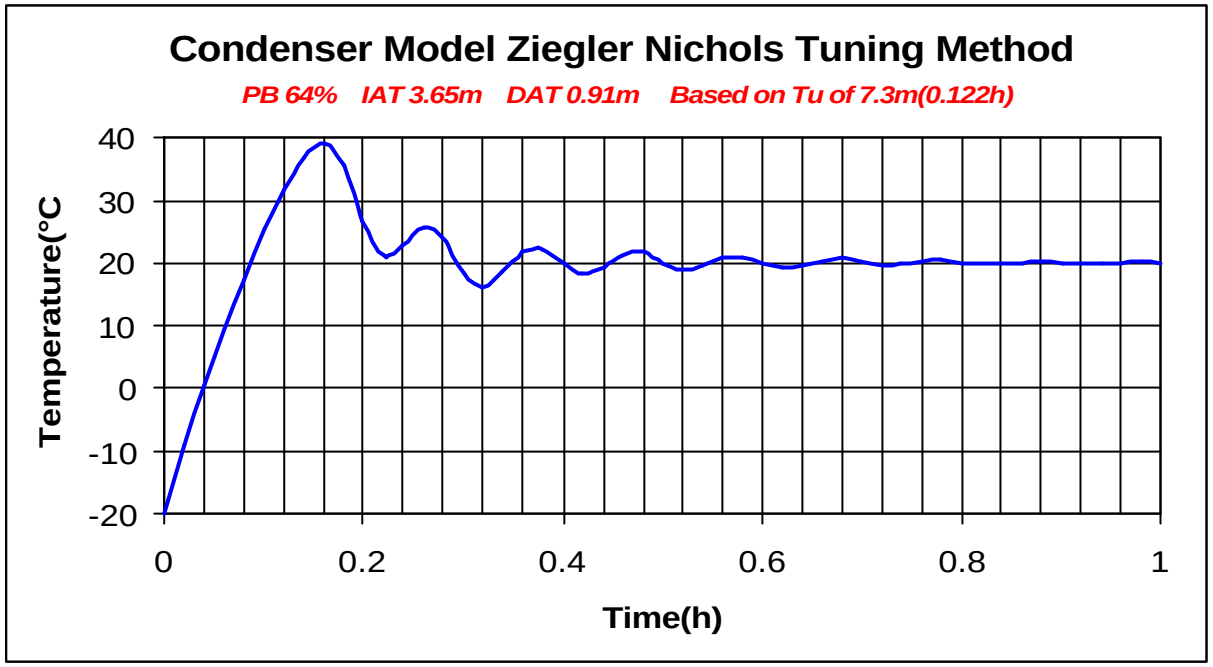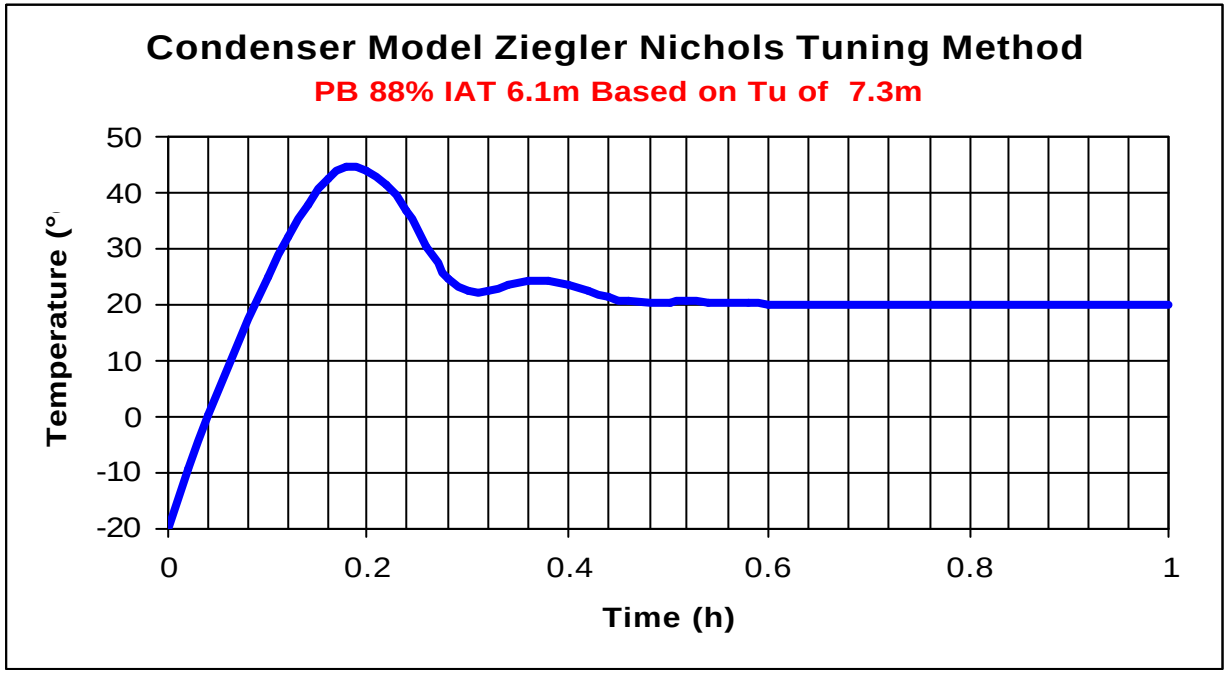
Graph 5